PRODUCED BY AN AUTODESK EDUCATIONAL PRODUCT

Propuesta de caja.

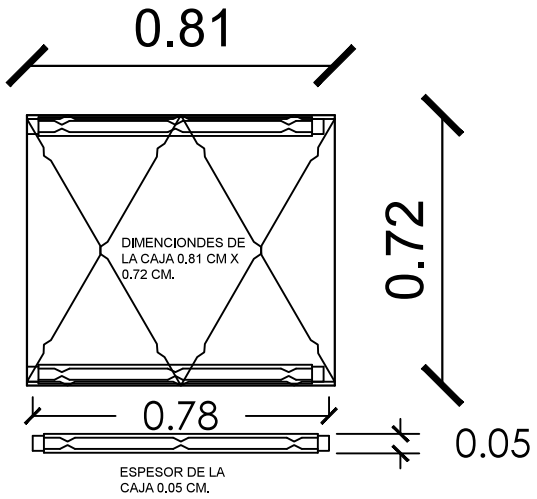

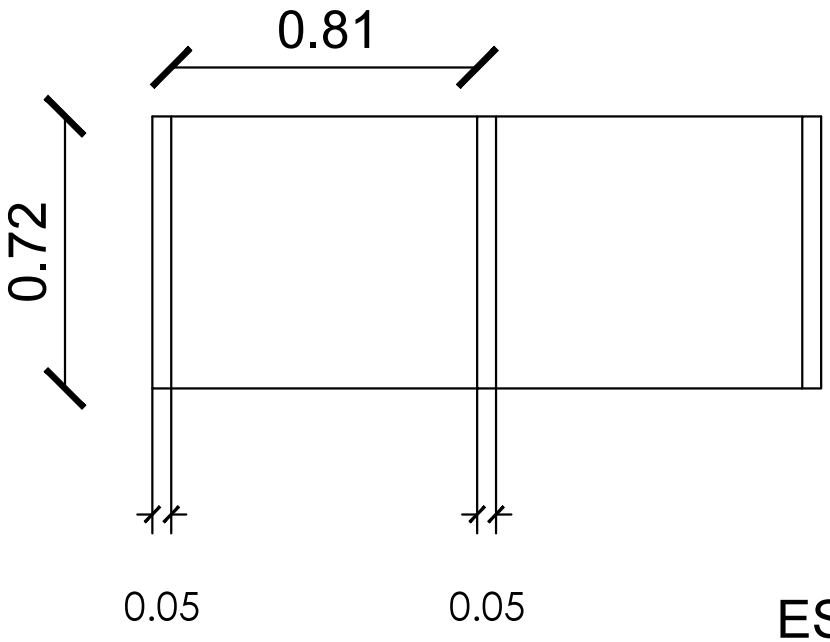

ESC 1:20

PRODUCED BY AN AUTODESK EDUCATIONAL PRODUCT
PRODUCED BY AN AUTODESK EDUCATIONAL PRODUCT
PRODUCED BY AN AUTODESK EDUCATIONAL PRODUCT